BEVERAGE-AIR®

INSTALLATION AND OPERATING INSTRUCTIONS
for all Hydrocarbon
BB Back Bar Refrigerator Models

809-183a Rev C. 06/19/2023
3779 CHAMPION BLVD, WINSTON-SALEM, NC 27105
Phone: (888) 845-9800 | Fax: (800) 253-5168 | Web: beverage-air.com

SEE BACK COVER FOR WARRANTY REGISTRATION

WELCOME

Thank you for purchasing a Beverage-Air cabinet. This series has passed our strict quality control inspection and meets the high standards set by Beverage-Air! You have made a quality investment that with proper maintenance will give you many years of reliable service!

Please read the following installation and maintenance instructions before installing or using your unit. If you have any questions, Please call our Technical Service Department at **(800) 684-1199**. 8:00 AM to 5:00 PM EST.

Important Information

- PLEASE READ THESE INSTRUCTIONS CAREFULLY BEFORE INSTALLING OR USING, IF RECOMMENDED PROCEDURES ARE NOT FOLLOWED, WARRANTY CLAIMS MAY BE DENIED.
- Your warranty registration information is located with this manual. Please complete the card and submit it to Beverage-Air within TEN days of installation. Failure to properly register equipment may limit or void the warranty.
- Beverage-Air reserves the right to change specifications and product design without notice. Such revisions do not entitle the buyer to corresponding changes, improvements, additions, or replacements for previously purchased equipment.

Safety 3
Important Information 4
Product Information 7
Clearance and Placement 8
Unpacking and Set Up 9
Shelf Installation 10
Sliding Doors, assembly 11
Keg installation 13
Electrical 14
Using The Unit - Danfoss Controller (Excluding the BB24HC models) 15
Sequence of Operations Refrigerator(Excluding the BB24HC models) 16
Using The Unit - Eliwell Controller (Excluding the BB24HC models) 20
Sequence of Operations Refrigerator(Excluding the BB24HC models) 21
Using The BB24HC 24
Sequence of Operations BB24HC 25
Cleaning and Maintenance 26
Condenser Cleaning 27
Methods For Cleaning Stainless Steel 28
Help 29
For The Service Tech - R290 30
For The Service Tech - Wiring Diagrams 31
Limited Warranty 34
Limited Warranty (continued) 35

SAFETY

This appliance has been designed with your safety in mind. It has many features to keep you from being harmed. However, safe operation and maintenance are your responsibilities. This appliance is not intended for use by persons (including children) with reduced physical, sensory or mental capabilities, or lack of experience and knowledge, unless they have been given supervision or instruction concerning use of the appliance by a person responsible for their safety.

Children should be supervised to ensure that they do not play with the appliance..

CAUTION

Use: When using this unit, please:

- **Move it carefully.** If on casters be sure the casters do NOT run over the power cord.
- **Lock** the casters when in use.
- **Seek help.** This machine is heavy! Be sure to move with enough help to avoid tipping or dropping the cabinet.
- **Prevent children from playing in or on the cabinet**. Persons unable to use this product must be prevented access.
- **Follow all instructions**. There are many safety labels and directions on the unit. Heed them.
- **Watch your fingers**. There may be pinch points near the door hinges.

CAUTION

Maintenance

Do NOT:

- Clean a frozen evaporator with a sharp object
- Clean a dirty condenser with a sharp object.
- Store gasoline, kerosene or any other flammable material near the cabinet.

Do ALWAYS

- Use a Beverage-Air recommended technician certified to repair R290 equipment.
- Use ONLY Beverage-Air factory service parts. Use of non OEM parts can be dangerous because of the design changes needed to safely use R290.

Important Information to Add

Record the model number, serial number and the date of installation here for future reference. The model and serial numbers are on the unit's serial number dataplate, which is located on the left inside wall.

Model Number	
Serial Number	
Date of Installation	
Purchased From	

CAUTION **WARNING**

Observe the **Caution** and **Warning** notices. They are indicators of important safety information. Keep this manual for future reference.

IMPORTANT INFORMATION

This unit is intended to be used in a commercial application. That includes bars and restaurants.

If installed in a residence some commercial service companies may not be able to service it on site.

The manufacturer has designed and produced this machine with the finest in materials. The manufacturer assumes no liability for units that have been altered in any way. Alterations or part substitutions will void the warranty.

Limitations

The machine is designed for use indoors in a controlled environment. It must be kept dry, not overheated or subjected to excessive cold. May only be connected to a dedicated electrical circuit. Extension cords are not permitted.

	Minimum	Maximum
Voltage	103.5	126.5
Room Air Temp	60° F	100° F

Air Flow, 24 inch Models regardless of section, door count or door material.

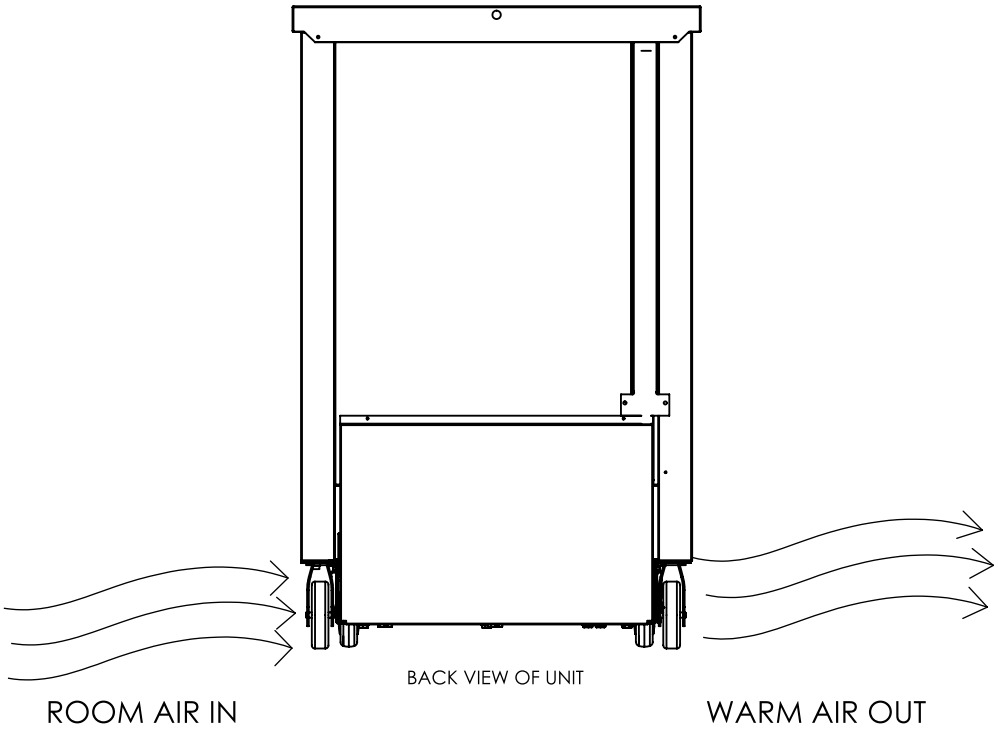

Agency Approvals

These marks appear on the dataplate or serial tag, located in the inside of the left wall. The dataplate also contains the model and serial numbers as well as electrical requirements.

Air Flow, 36 - 48 inch Models regardles of section, door count or door material.

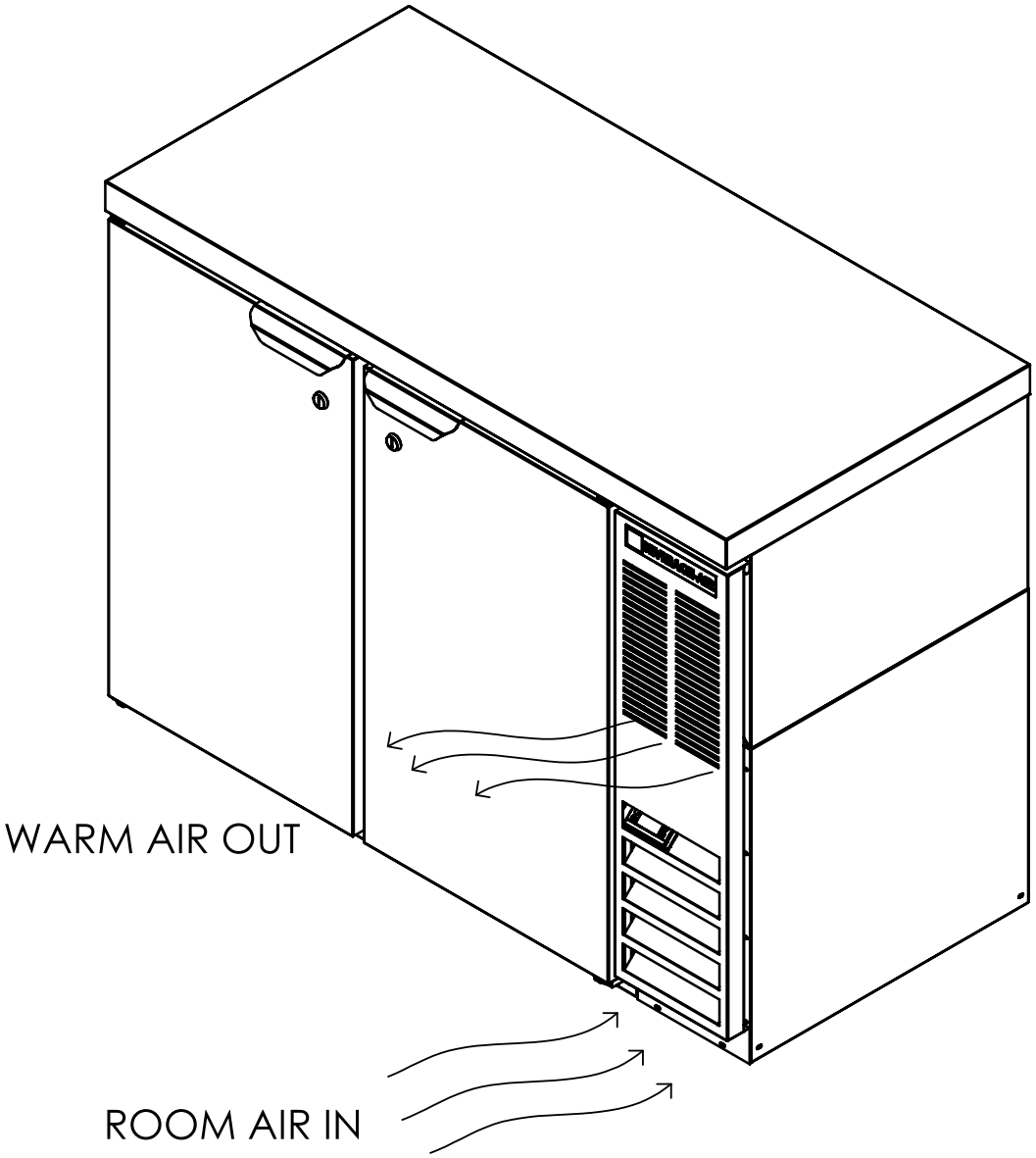

Air Flow, 58 - 94 inch Models regardles of left or right grille location, section, door count or door material. Left grille shown, right grille similar but air flows in the right front, out the back and right side.

****When side and rear clearance aren't provided, the unit will exhaust out the front.**

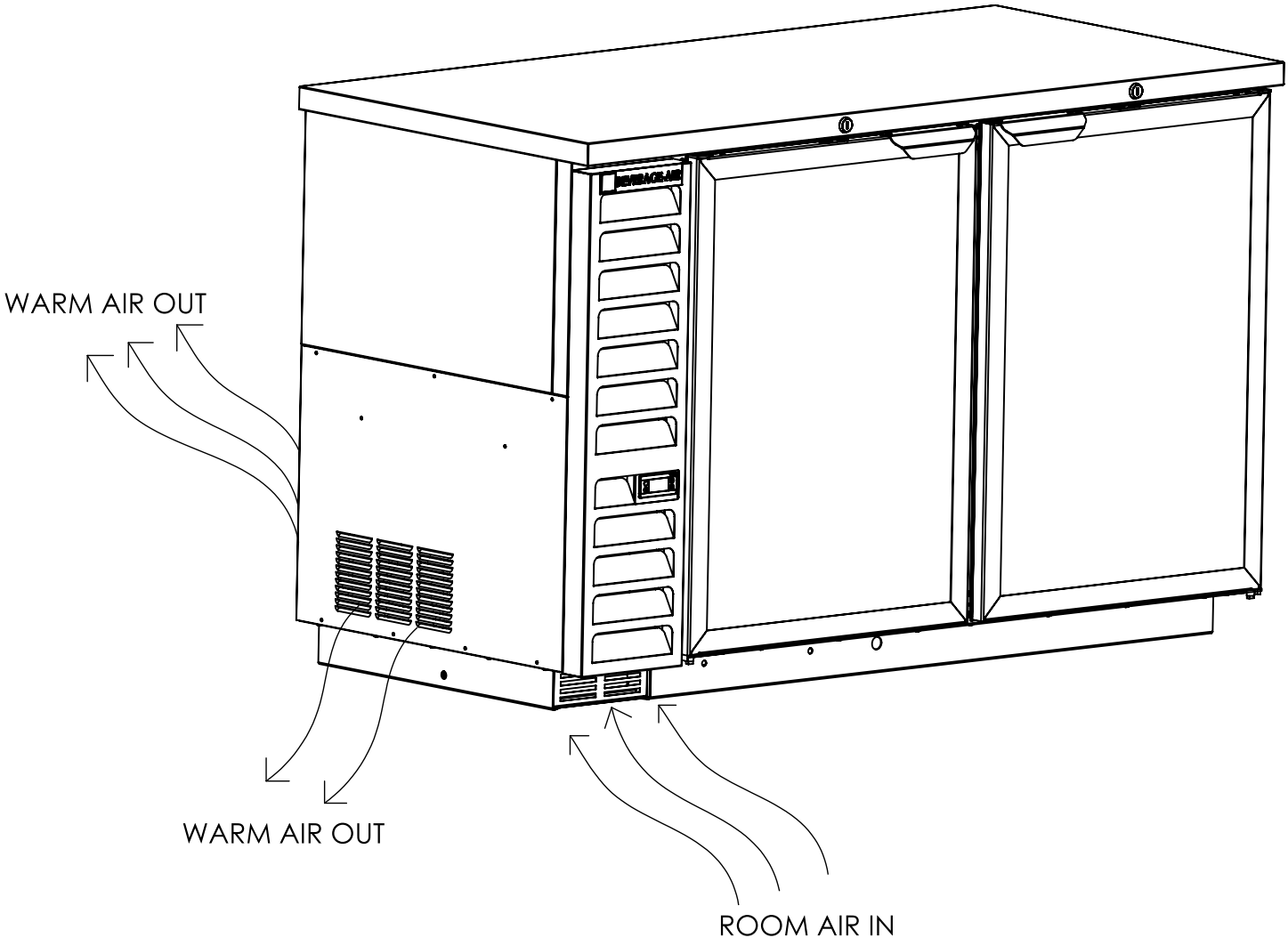

PRODUCT INFORMATION

Model	Cabinet Dimensions w x d x h (Inches)	Door Count	Glass or Solid Door	Full Load Amps	Power Cord Plug (NEMA)	Refrigerant Type / Charge (g)
BB24HC-1	24 x 30 1/8 x 37 3/4	1	Solid	2	5-15P	R-290 / 55*
BB24HC-1-G	24 x 30 1/8 x 37 3/4	1	Glass	2	5-15P	R-290 / 55*
BB36HC-1	36 x 24 1/2 x 34	2	Solid	2.5	5-15P	R-290 / 90*
BB36HC-1-G	36 x 24 1/2 x 34	2	Glass	2.5	5-15P	R-290 / 90*
BB48HC-1	48 x 24 1/2 x 34	2	2 Solid	2.5	5-15P	R-290 / 90*
BB48HC-1-GS	48 x 23 5/8 x 34	2	Sliding Glass	2.5	5-15P	R-290 / 90*
BB48HC-1-PT	48 x 27 3/8 x 34	4	Solid	3.1	5-15P	R-290 / 80*
BB48HC-1-G-PT	48 x 27 3/8 x 34	4	Glass	3.1	5-15P	R-290 / 80*
BB48HC-1-GS-PT	48 x 23 5/8 x 34	4	Sliding Glass	2.5	5-15P	R-290 / 80*
BB58HC-1	59 x 29 1/8 x 37 1/4	2	Solid	2.5	5-15P	R-290 / 95*
BB58HC-1-G	59 x 29 1/8 x 37 1/4	2	Glass	2.5	5-15P	R-290 / 95*
BB58HC-1-GS	59 x 28 1/4 x 37 1/4	2	Sliding Glass	2.5	5-15P	R-290 / 95*
BB68HC-1	69 x 29 1/8 x 37 1/4	2	Solid	5.3	5-15P	R-290 / 115*
BB68HC-1-G	69 x 29 1/8 x 37 1/4	2	Glass	5.3	5-15P	R-290 / 115*
BB72HC-1	72 x 24 1/2 x 34	3	Solid	3.1	5-15P	R-290 / 80*
BB72HC-1-G	72 x 24 1/2 x 34	3	Glass	3.1	5-15P	R-290 / 80*
BB72HC-1-GS	72 x 23 5/8 x 34	3	Sliding Glass	3.1	5-15P	R-290 / 80*
BB72HC-1-PT	72 x 27 3/8 x 34	6	Solid	3.1	5-15P	R-290 / 80*
BB72HC-1-G-PT	72 x 27 3/8 x 34	6	Glass	3.1	5-15P	R-290 / 80*
BB72HC-1-GS-PT	72 x 25 3/4 x 34	6	Sliding Glass	3.1	5-15P	R-290 / 80*
BB78HC-1	79 x 29 1/8 x 37 1/4	3	Solid	5.5	5-15P	R-290 / 115*
BB78HC-1-G	79 x 29 1/8 x 37 1/4	3	Glass	5.5	5-15P	R-290 / 115*
BB94HC-1	95 x 29 1/8 x 37 1/4	3	Solid	5.5	5-15P	R-290 / 115*
BB94HC-1-G	95 x 29 1/8 x 37 1/4	3	Glass	5.5	5-15P	R-290 / 115*

Height includes casters.

- All models will maintain product temperature between 35.5 and 40.5 degrees F. at the factory setting of 38.^{0}F.
- All models are 115 volts, 60 Hz AC.
- ALWAYS REFERENCE YOUR EQUIPMENT DATA PLATE AMPS, REFRIGERANT AND REFRIGERANT CHARGE FOR THE MOST UP TO DATE AND ACCURATE VALUES
- There are no access valves on the refrigeration system.

*55 grams = 1.94 ounces, *80 grams = 2.82 ounces

*115 grams = 4.05 ounces, *95 grams = 3.36 ounces

CLEARANCE AND PLACEMENT

0 INCHES MINIMUM CLEARANCE AT TOP, SIDES AND BACK.

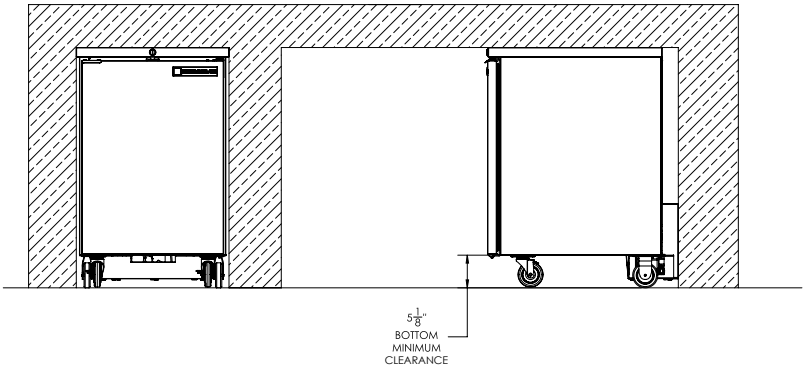

0 INCHES MINIMUM CLEARANCE AT TOP, BOTTOM, SIDES AND BACK.

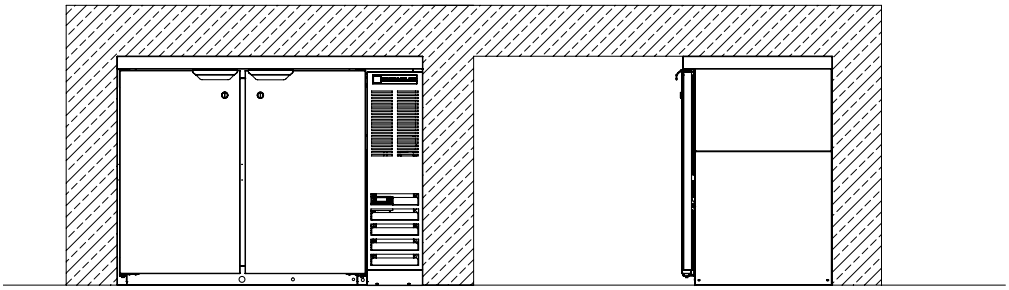

0 INCHES MINIMUM CLEARANCE AT TOP, BOTTOM, SIDES AND BACK.

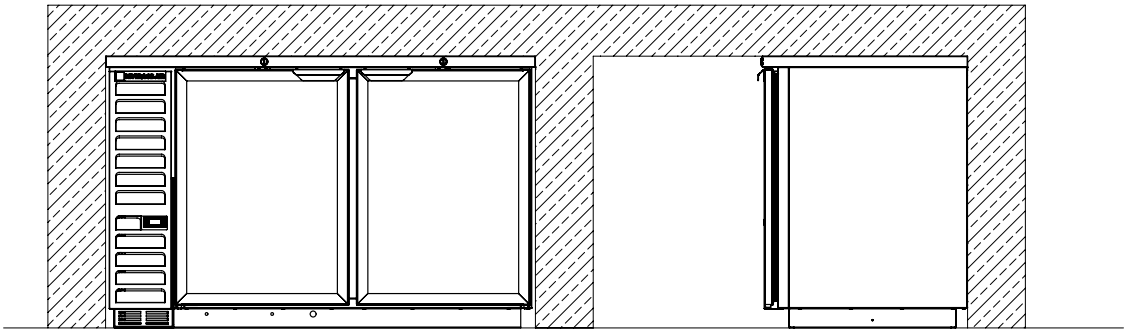

Placement

Consider the following when selecting a location for your Refrigerator:

Clearance:

- **None required at top, back or sides.**

Floor Load: the floor on which the Refrigerator is located must be even and level, free from vibrations, and strong enough to support the combined weights of the unit and maximum product load.

Ventilation: Grille area at front must be free and clear of any object or wall.

Power Outlet: The installation of this appliance requires a dedicated power outlet located within the length of the unit's power cord and be accessible for the purpose to disconnect power.

UNPACKING AND SET UP

Carefully inspect the shipping carton for damage. This is the only time that shipping damage may be claimed. If damage is suspected, open the carton immediately and, if there is damage, retain the carton and contact the shipper to make a claim. Do NOT contact the manufacturer.

Uncrating

Tools Needed: ¾" box wrench, adjustable wrench, level, flat head screw driver, and box cutter.

1. Remove the cardboard top capping, all clear tape, and all staples including those at the bottom of the cardboard carton and skid.
2. Start from the top of the carton. Using the box cutter, carefully make one continuous cut to the bottom of the skid. Remove cardboard carton and discard.

Note: additional clear plastic protective wrap is applied directly to any product with a glass door.

3. Move unit as close to final position as possible before removing the skid.

Note: The skid must be removed before the casters or legs can be attached.

Do NOT tip unit on its front or sides. If tipped onto the back, unit must not be started for 3 hours.

Skid Removal and Caster Attachment

Tip the unit forward and remove the skid.

WARNING

Risk of personal injury.
Unit must be securely supported while attaching casters or legs.

1. Remove the shipping bolts using the ¾" box wrench while cabinet is held in one direction. Repeat the process while the cabinet is held in the opposite direction.
2. None of the threads on the leg or caster stem should be visible once screwed in.
3. Tilt the cabinet in one direction approximately 8" and block it securely with pieces of 2x4 lumber or other suitable material.
4. Thread the stem casters or legs into the ½ -13 holes in the bottom of the cabinet. Tighten by hand as much as possible. Some models may already have levelers installed. If so, then the levelers will need to first be removed and discarded.
5. Once the caster or leg cannot be turned any further, use a 3/4 inch wrench to tighten the nut in between the mounting plate and the wheel of the caster until snug.
6. Repeat this procedure with unit secured in the opposite direction so as to access the remaining legs/casters/levelers.
7. If plate casters or legs are installed instead of stem casters or legs, then repeat step 3 above and secure the plate with either #14 AB screws, or ¼-20 screws, depending upon which are required.
8. If levelers are employed, then repeat step 3 above and thread the leveler in place. Then repeat step 6.

Leveling:

Cabinets must be leveled when installed. Level should be measured on the headrail.

Failure to level your cabinet may result in door not sealing, closing correctly, or condensed water draining not draining properly.

For cabinets with legs, rotate the foot of the leg with an adjustable wrench to achieve desired height for leveling.

For cabinets with casters, leveling can be achieved by placing large washers in between the ½' stud and the holes located on the bottom of the case.

Do NOT loosen casters to level the cabinet. Casters MUST be tightly secured to cabinet for full strength.

CAUTION

Install or attach any accessories that will be used Remove any plastic covering the stainless steel.

SHELF INSTALLATION

1. Determine the proper location for the shelf clips. The reference numbers on the pilaster can serve as a guide to ensure all clips are properly located.
2. Insert the top tab of the shelf clip into the desired hole of the pilaster. The retaining tab MUST be facing up as shown.
3. Rotate the clip downwards and insert the bottom tab into the matching hole in the pilaster. The clip may need to be squeezed slightly during installation.
4. Install all remaining clips.
5. Install shelves onto clips with the product retention bar facing up. Be careful not to dislodge clips during installation.
6. Place shelves so that the retaining tab on the clip captures the shelf as shown.
7. Confirm that the shelf is resting on ALL 4 clips and that the clips are securely attached to the pilasters.
8. Improper shelf clip installation could cause the shelf and / or the product on it to fall, resulting in damage to the unit and possible bodily injury.
9. Do NOT overload the shelves. The unit is designed to use all shelves that are supplied in an equally spaced manner. Contact Beverage-Air customer service if fewer shelves or a different configuration to ensure shelf overloading will not occur.

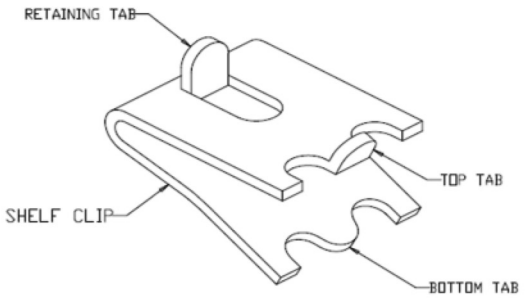

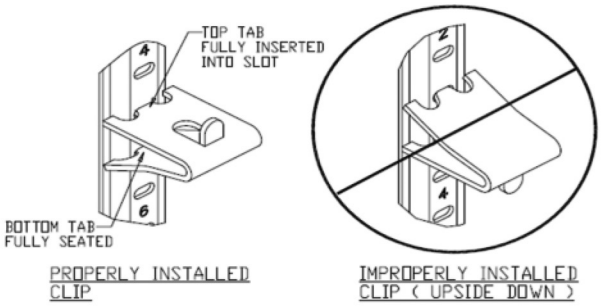

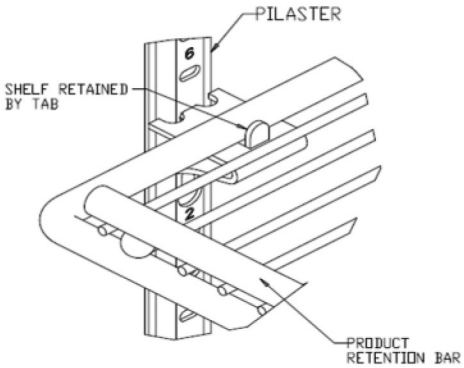

SLIDING DOORS, ASSEMBLY

Leveling

Figure 2a

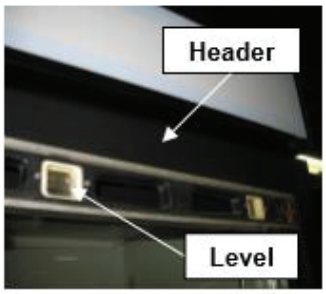

Figure 2b

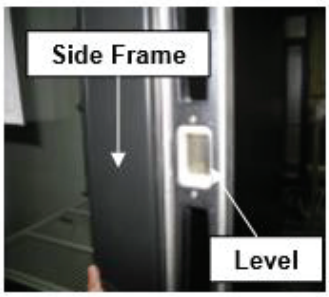

1. To insure proper operation, the cabinet must be level.
2. Level the cabinet, see page
3. Verify the level condition by putting a level on the header (figure 2a) and side frame (figure 2b) of the door assembly.

Door Removal and Installation

Figure 3a

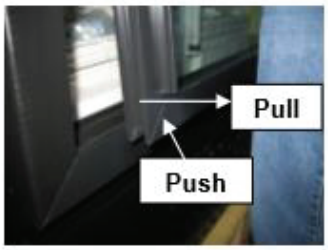

Figure 3b

Figure 3c

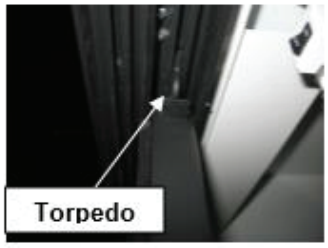

Figure 3d

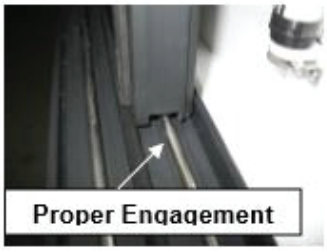

1. Each door can be removed for cleaning and maintenance.
2. To remove a door, lift it up off the track and pull the bottom of the door away from the cabinet. Upwards pressure must be maintained (figure 3a) while pulling the door bottom.
3. Once the bottom of the door has cleared the track, pull the door slowly away from the self closing device as it retracts and awy from the cabinet (figure 3b).
4. To install a door, simultainously lift and rotate the door.
5. While lifting, insert the upper corner of the door into the upper door track so that the torpedo is placed against that corner of the door (figure 3c).
6. Push the self closing device with the door until the door becomes horizontal, then pivot the door down onto the lower frame track (figure 3d) and allow the door to rest on the sil track.
7. Check for proper operation.

Figure 4a Figure 4b

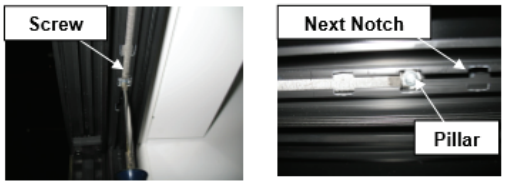

Figure 4c

ADJUSTING SPRING TENSION

1. Adjust the spring tension if the door(s) do not fully close.
2. First, remove the door that does not fully close.
3. After removal of the door, remove the spring installation screw (figure 4a), and slide the nylon spring pillar over one notch toward the handle side of the door (figure 4b & 4c), so that it increases the tension in the spring.
4. Reinstall the nylon spring screw in the new location.
5. Replace the door and check for proper alignment and operation with the new tension setting.
6. Repeat this for each door that requires adjustment.

CLEANING

Door frames should be cleaned with a solution of mild soap and water. Do not use caustic soap or abrasive cleaners, since these might damage the finish.

If stainless steel roller track surfaces become discolored, scrub by rubbing along the length of the track. Do not use steel wool.

Clean glass surfaces with a standard glass cleaning solution.

TROUBLESHOOTING

If doors do NOT operate properly, check for the following:

1. Minimum of 1/32" of CLEARANCE between the vertical gaskets on the COLD S IDE doors and the horizontal frame gaskets located at the header and sill of the frame in between the doors.
2. Self-closing device (a.k.a. "Torpedo·) is properly located on edge of door and is not "pinched" or "bound· between the top of the door and the frame, and that torpedo operates smoothly.
3. Sash covers on doors are properly snapped into place and have NOT slipped down, and are NOT dragging on the sill track of the frame or rubbing the frame header.
4. Self-closing spring is properly attached to its nylon retaining pillar in the frame header C-channel and is not kinked in any way.
5. Door is sitting on its wheels, the wheels are properly aligned on the stainless steel roller track, and the door moves freely back and forth.
6. Door is not bowed in or out from top to bottom causing doors to rub on frame or frame gaskets.
7. Cabinet is relatively level (within approximately 3/16" of level across the full width of the frame).
8. Sill tracks with stainless steel roller track covers are properly snapped into p lace and are not bowed up or down across the width of the frame.

If installed doors do NOT close fully after above checks are complete, then consider increasing the tension on the self-closing spring(s) by:

1. Removing door(s) that are not closing properly.
2. Removing spring installation screw and sliding nylon spring pillar over one notch so that it increases the tension in the spring when it is at rest. Reinstall the nylon spring screw in this new location.
3. Reinstall the door(s).
4. Check for proper operation of doors with increased spring tension.

If installed doors still do NOT close fully after above checks and adjustments, then install stronger spring(s):

1. Verify that the sill track is fully engaged (snapped) into the channel over the sill track"s entire length.
2. Verify that the frame seals are fully seated in the frame. If the seals are not fu lly seated, they could interfere with the movement of the door.
3. Verify that the frame was not bowed during installation. If the frame is bowed, contact Beverage-Air Technical Service.

If installed doors still do NOT close fully after all of the above checks, contact Beverage-Air Technical Service.

KEG INSTALLATION

Safety First! If in doubt about how to handle the CO2 system contact your dealer/distributor

How to Install a CO2 Regulator and Replace an Empty CO2 Cylinder

1. Shut off gas pressure to dispenser by closing the Cylinder Valve and the Shut off Valve.
2. Loosen the Adjustment Nut (counter-clockwise) and then unscrew the Adjustment Screw (counter-clockwise) as far out as it will go to put the regulator in the 'Off' position.
3. Remove the regulator from the cylinder by loosening the Gold Regulator Nut.
4. Remove the dust cap from the new cylinder and attach the regulator to the new cylinder with the Gold Regulator Nut. Make sure all sealing washers are in place before connecting.

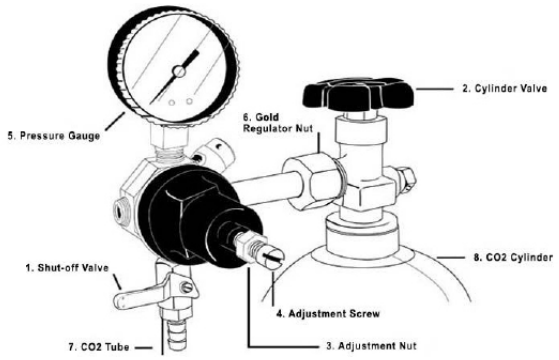

5. Open the Cylinder Valve all of the way. This is important because the cylinder valve seals in two places.
6. Screw the Adjustment Screw counterclockwise until the required pressure is reached on the Pressure Gauge.
7. Open the Shut Off Valve

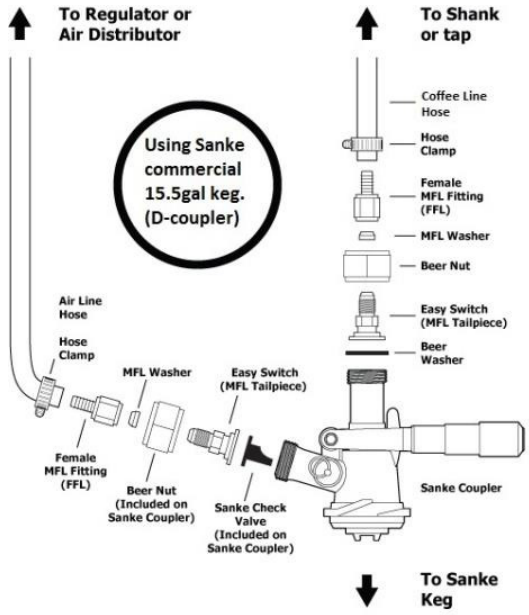

How to tap a keg with a Sanke device.

1. Connect the line from the pressure source to the Female MFL Fitting using a hose clamp.
2. Align the Sanke Coupler with the lugs in the beer keg and insert.
3. Turn the Sanke Coupler ¼ turn clockwise until tight in the keg.
4. Rotate the Handle down 90° to assure the gas ports in the keg are fully opened.
5. Open the pressure source

ELECTRICAL

This is a cord-connected unit, and must be connected to its own **dedicated** power supply. Check the dataplate on the machine to confirm the voltage and per the dataplate use the correct fuses or HACR circuit breakers.

Note: Do not connect to GFI / GFCI outlets. Connection to that type of outlet can result in product loss due to unsafe cabinet temperature when GFI device trips from moisture.

Power Cord

This 115 volt model is equipped with a cord and 5-15P plug.

If the power cord becomes damaged, it must be replaced with the identical cord.

Follow All National and Local Codes

This unit must be grounded. Do not use extension cords and do not disable or by-pass ground prong on electrical plug.

Initial Start Up

Plug the power cord into the proper power supply.

The cabinet will soon begin to blow warm air out, and cool air will flow from the inside blower.

The cabinet temperature has been set at the factory and should not need adjustment, however if it was changed, the standard setting is 38° F.

Cautions

Care must be taken whenever moving or servicing the unit. The refrigerant is contained in a sealed system, but if released it may be flammable.

USING THE UNIT WITH DANFOSS CONTROLLER (EXCLUDING THE BB24HC MODELS)

Operation is simple, just keep it connected to the correct power supply and the refrigerator will maintain the internal temperature it has been set to. Keep the doors and / or drawers closed as much as possible to avoid unnecessary run time.

NOTE: Once the unit has been started and reaches proper storage temperatures, it may be loaded with product. No provision is made in the cabinets to quickly pull a keg of beer down to temperature. Best results are obtained when a pre-chilled keg is used. Otherwise it can take several hours to reduce the keg to the desired temperature.

The controller displays the current internal temperature.

Adjusting the set temperature lower will NOT cause the system to lower the temperature faster. When on, the refrigeration system is always operating at maximum.

The temperature was set at the factory at 38˚ F, but you can adjust it to your own selected temperature. 30 seconds after adjustment, the display automatically reverts to showing the current temperature.

The Refrigerator will automatically defrost as needed, there is no set time for defrost. Push and immediately release the "melting" or defrost button for a manual defrost.

Note: Holding the defrost button in too long will shut the controller off.

The internal fan will be on when the compressor is on and when the doors are closed.

The compressor and condenser fan motor will only be on when the controller senses an increase in internal cabinet temperature passed the set point.

If equipped with glass doors, holding the SC button in will turn the cabinet light on or off.

In most cases the only thing displayed will be the cabinet temperature. When something other than normal operation has occurred, a message will be shown.

Message Displayed	Why	What to do
dEF	Unit is defrosting	Nothing. Normal operation.
Hi	Cabinet temperature too warm	Confirm doors or drawers are closed.
dOr	Door is open	Close door, if message does not change, call for service.
LEA	Compressor run time too long	Check doors closed. If yes, call for service.
E01, E02, E03, E04	Sensor unplugged or has failed	Call for service.

SEQUENCE OF OPERATIONS REFRIGERATOR (EXCLUDING THE BB24HC MODELS)

The refrigerator operates based on the air temperature measured by the probe located at the return air.

	ON		OFF	
COMPONENT	OPERATION	CONTROLLER ACTION	OPERATION	CONTROLLER ACTION
COMPRESSOR	Compressor turns on when the air temperature at the probe is above the sum of the set point +2	The Compressor Contact is energized (ERC 112 – Terminal #1)	Compressor turns off when the air temperature at probe is equal to or less than the set point -2	The Compressor Contact is de-energized (ERC 112 – Terminal #1)
CONDENSER FAN	The Condenser Fan turns on when the Compressor is running	The Condenser Fan is wired directly to the Compressor, not through the controller	The Condenser Fan turns off when the Compressor is not running	The Condenser Fan is wired directly to the Compressor, not through the controller
EVAPORATOR FAN	The Evaporator Fan runs continuously in refrigerators. When the unit is plugged in, the Evaporator Fan will run.	The Evaporator Fan is connected directly to incoming power, not through the controller.	The Evaporator Fan runs continuously. When the unit is plugged in, The Evaporator Fan will run.	The Evaporator Fan is connected directly to incoming power, not through the controller.
LIGHT	The light will turn on when the SC is pressed (or when the door is opened with solid doors)	The Light Contact is energized (ERC 112 – Terminal #4)	The light will turn off when the SC is pressed (or when the door is closed with solid doors)	The Light Contact is de-energized (ERC 112 – Terminal #4)

Condition	Compressor	Condenser Fan	Evaporator Fan	Lights
Cabinet Temp > Set point + 2	ON	ON	ON	ON or OFF
Cabinet Temperature <= Set point - 2	OFF	OFF	ON	ON or OFF
Defrost	OFF	OFF	ON	ON or OFF

Electronic Controller

Control Panel Display

	Defrost LED	
	On fixed:	Defrost active
	Off:	Defrost is off

	Alarm LED	
	On fixed:	ALARM Present
	Flashing:	ALARM Silenced
	Off:	No Alarm

	Fan LED	
	On fixed:	Fan active
	Off:	Fan Off

	Compressor LED	
	On fixed:	Compressor active
	Flashing:	Delay, protection or activation blocked
	Off:	No Alarm

NOTE: When switched on, the instrument panel performs a lamp test for a few seconds.

Keyboard Functions

Note: When the controller is in a Standby Mode, a blue dot will be displayed as shown here. To switch out of Standby Mode, push and hold the Defrost button until the display reads ON.

▲	▼		SC
UP	**DOWN**	**DEFROST (ESC)**	**SET (ENTER)**
Quick press and release	**Quick press and release**	**Quick press and release**	**Quick press and release**
• Increases Set Point	• Decreases Set Point	• Activates manual defrost	• Toggles lights on/off
Long press and release	**Long press and release**	**Long press and release**	**Long press and release**
• Increases display brightness	• Decreases display brightness	• Controller enter stand-by mode	• Toggles display °F/°C

Control Panel Connections

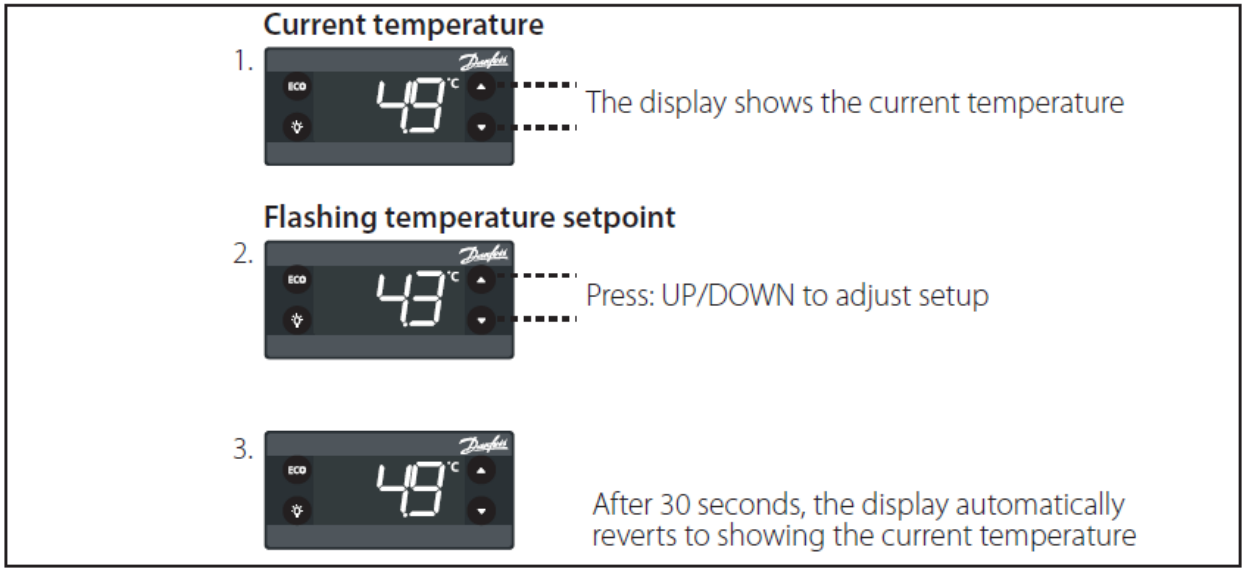

The alarm condition is always signaled by the alarm icon .

Press any button to silence the alarm, the relative icon will continue flashing.

Alarm Code	Trigger	Automatic Clearance	Outputs	Comments
"Hi"	Air temperature is higher than "ALA->Hat• for "ALA->Htd"	User configured	Blink "Hi" with the highest temperature; If configured: cut in alarm relay, beep the buzzer	High temperature alarm
"Lo"	Air temperature is lower than "LAt" for "Ltd"	User configured	Blink "Lo" with the lowest temperature. If configured: cut in alarm relay, beep the buzzer	Low temperature alarm
"Con"	Condenser temperature is too high or too low	User configured	Blink "Con". If configured: cut in alarm relay, beep the buzzer	Condenser alarm
"dor"	Door open for more than	Always	Blink "dor". If configured: cut in alarm relay, beep the buzzer	Door open alarm
"uHi"	Line voltage is higher than "Cop->uHi"	Always	Blink "uHi". If configured: cut in alarm relay, beep the buzzer	High voltage alarm
"uLi"	Line voltage is higher than "Cop->uLi"	Always	Blink "uLo". If configured: cut in alarm relay, beep the buzzer.	Low voltage alarm
"LEA"	Compressor continuous running for more than "ALA->LEA"	Always	Blink "LEA". If configured: cut in alarm relay, beep the buzzer	Leakage alarm
"E01"	"S1" error	Always	Blink "E0l ". If configured: cut in alarm relay, beep the buzzer	"S1" sensor failure (short or open)
"E02"	"S1" error	Always	Blink "E02". If configured: cut in alarm relay, beep the buzzer	"S2" sensor failure (short or open)
"E03"	"S1" error	Always	Blink "E03 ". If configured: cut in alarm relay, beep the buzzer	"S3" sensor failure (short or open)
"E04"	"S1" error	Always	Blink "E04 ". If configured: cut in alarm relay, beep the buzzer	"S4" sensor failure (short or open)

How to Acknowledge Alarms:

NOTE: If alarm exclusion times are in progress (**ALA** folder of the parameter table), the alarm is not signaled.

1.

The alarm code flashing alternately with the temperature and the alarm symbol is displayed

Press any button to acknowlege

2.

After the acknowledge the temperature is displayed and the alarm symbol remains shown

USING THE UNIT WITH ELIWELL CONTROLLER (EXCLUDING THE BB24HC MODELS)

Operation is simple, just keep it connected to the correct power supply and the refrigerator will maintain the internal temperature it has been set to. Keep the doors and / or drawers closed as much as possible to avoid unnecessary run time.

NOTE: Once the unit has been started and reaches proper storage temperatures, it may be loaded with product. No provision is made in the cabinets to quickly pull a keg of beer down to temperature. Best results are obtained when a pre-chilled keg is used. Otherwise it can take several hours to reduce the keg to the desired temperature.

The controller displays the current internal temperature.

Adjusting the set temperature lower will NOT cause the system to lower the temperature faster. When on, the refrigeration system is always operating at maximum.

The temperature was set at the factory at 38° F, but you can adjust it to your own selected temperature. 30 seconds after adjustment, the display automatically reverts to showing the current temperature.

The Refrigerator will automatically defrost as needed, there is no set time for defrost. Push and immediately release the "melting" or defrost button for a manual defrost.

The internal fan will be on when the compressor is on and when the doors are closed.

The compressor and condenser fan motor will only be on when the controller senses an increase in internal cabinet temperature passed the set point.

If equipped with glass doors, holding the SC button in will turn the cabinet light on or off.

In most cases the only thing displayed will be the cabinet temperature. When something other than normal operation has occurred, a message will be shown.

Message Displayed	Why	What to do
dEF	Unit is defrosting	Nothing. Normal operation.
AH1	Cabinet temperature too warm	Confirm doors or drawers are closed.
OPd	Door is open	Close door, if message does not change, call for service.
E1, E2, E3, E4	Sensor unplugged or has failed	Call for service.

SEQUENCE OF OPERATIONS REFRIGERATOR (EXCLUDING THE BB24HC MODELS)

	ON		OFF	
COMPONENT	**OPERATION**	**CONTROLLER ACTION**	**OPERATION**	**CONTROLLER ACTION**
COMPRESSOR	Compressor turns on when the air temperature at the probe is above the sum of the set point + 4	The Compressor Contact is energized (EW+978 - Terminal #1)	Compressor turns off when the air temperature at probe is equal to or less than the set point	The Compressor Contact is de-energized (EW+978 - Terminal #1)
CONDENSER FAN	The Condenser Fan turns on when the Compressor is running	The Condenser Fan is wired directly to the Compressor, not through the controller	The Condenser Fan turns off when the Compressor is not running	The Condenser Fan is wired directly to the Compressor, not through the controller
EVAP FAN	The Evaporator Fan turns on when the unit is powered on.	The Evaporator Fan is wired to constant power Some models will be wired to the fan relay (EW+978 - Terminal #3)	The Evaporator Fan turns off when the unit is unplugged or put into standby.	The Evaporator Fan is wired to constant power Some models will be wired to the fan relay (EW+978 - Terminal #3)
LIGHT	The light will turn on when the down button is pressed (or when the door is opened with solid doors)	The Light Contact is energized (Ew+978 – Terminal #2)	The light will turn off when the down button is pressed (or when the door is closed with solid doors)	The Light Contact is de-energized (Ew+978 – Terminal #2)

Condition	Compressor	Condenser Fan	Evaporator Fan	Lights
Cabinet Temp > Set point + 4	**ON**	**ON**	**ON**	**ON or OFF**
Cabinet Temperature <= Set point - 4	**OFF**	**OFF**	**ON**	**ON or OFF**
Defrost	**OFF**	**OFF**	**ON**	**ON or OFF**

Controller Symbols

	Reduced SET / Economy Permanently on: Energy Saving Mode Flashing: Reduced Set Mode Quick Flashing: Access to level 2 parameters	AUX	**AUX** Permanently on: Aux Active Flashing: Deep Cooling Cycle Active
	Compressor Permanently On: Compressor Active Flashing: Delay, protection or blocked start-up		**Defrost** Permanently on: Defrost Active Flashing: Manual or D.I. activation
	Alarm Permanently on: Alarm Active Flashing: Alarm Acknowledged		**Fan** Permanently on: Fans Active
°C	**Celsius** Permanently On: ˚C Setting	°F	**Fahrenheit** Permanently on: ˚F Setting

Controller Buttons

	Up Press and release • Scrolls through menu items • Increases Values Press for at least 5 seconds • Activates the manual defrost		Stand-by Press and release • Returns to the previous menu level • Confirm parameter value Press for at least 5 seconds • Activates the stand-by function
	Down Press and release • Scrolls through menu items • Decreases values Press for at least 5 seconds • Turn light on/off	set	Set (Enter) Press and release • Displays alarms • Opens the machine status menu Press for at least 5 seconds • Opens the programming menu • Confirms commands

Alarms are always indicated by the buzzer (if present) and the alarm icon. To switch off the buzzer, press and release any key, the relative icon will continue to flash.

NOTE: If alarm exclusion times have been set (see AL folder in the parameters table), the alarm will not be signaled.

Alarm Code	Trigger	Automatic Clearance	Outputs	Comments
"AH1"	Pb1 probe HIGH Temperature alarm	User configured	Label AH1 displayed alternately with the actual value read by the probe Pb1	High temperature alarm
"AL1"	Pb1 probe LOW Temperature alarm	User	Label AL1 displayed alternately with the actual value read by the probe Pb1	Low temperature alarm
"OPd"	Door open for more than	Always	Label OPd displayed alternately with the actual value read by probe Pb1	Door open alarm
"E1"	"E1" error	Always	Blink “E1 ". If configured: cut in alarm relay, beep the buzzer	"PB1" sensor failure (short or open)
"E2"	"E2" error	Always	Blink "E2". If configured: cut in alarm relay, beep the buzzer	"PB2" sensor failure (short or open)
"E3"	"E3" error	Always	Blink "E3 ". If configured: cut in alarm relay, beep the buzzer	"PB3" sensor failure (short or open)
"E4"	"E4" error	Always	Blink "E4 ". If configured: cut in alarm relay, beep the buzzer	"PB4" sensor failure (short or open)

USING THE BB24HC

Operation is simple, just keep it connected to the correct power supply and the refrigerator will maintain the internal temperature it has been set to. Keep the door closed as much as possible to avoid unnecessary run time.

NOTE: Once the unit has been started and reaches proper storage temperatures, it may be loaded with product. No provision is made in the cabinets to quickly pull a keg of beer down to temperature. Best results are obtained when a pre-chilled keg is used. Otherwise it can take several hours to reduce the keg to the desired temperature.

Adjusting the set temperature lower will NOT cause the system to lower the temperature faster. When on, the refrigeration system is always operating at maximum.

The internal fan will remain on when ever the unit is connected to power.

The compressor and condenser fan motor will only be on when the controller senses an increase in internal cabinet temperature passed the set point.

Before making temperature adjustments, allow the unit to stabilize for 1 hour and verify that a temperature adjustment is needed. If an adjustment is needed; turn knob one number and allow the unit to stabilize for 1 hour before rechecking the cabinet temperature. If additional adjustment is needed, repeat process to achieve the desired operation temperature.

Clockwise = Colder

Counter Clockwise = Warmer

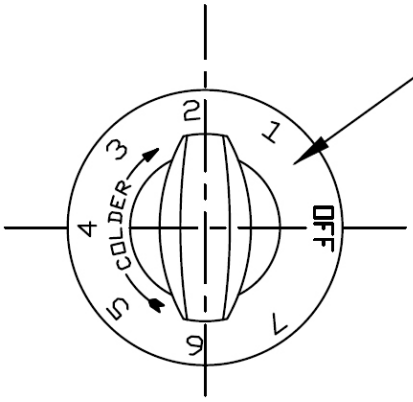

Turn the dial clockwise to lower the temperature or counter clockwise to raise the temperature.

Excessive tampering with temperature control could lead to service difficulties.

* For operation above 3000-ft altitude, have thermostat adjusted by a qualified technical service representative.

Cautions

Care must be taken whenever moving or servicing the unit. The refrigerant is contained in a sealed system, but if released it may be flammable.

SEQUENCE OF OPERATIONS BB24HC

The refrigerator operates based on the air temperature measured by the probe located at the return air.

	ON		OFF	
COMPONENT	OPERATION	CONTROLLER ACTION	OPERATION	CONTROLLER ACTION
COMPRESSOR	Compressor turns on when the air temperature at the probe is above the sum of the set point	The Compressor Contact is energized (502-519D – Terminal #4)	Compressor turns off when the air temperature at probe is equal to or less than the set point	The Compressor Contact is de-energized (502-519D – Terminal #4)
CONDENSER FAN	The Condenser Fan turns on when the Compressor is running	The Condenser Fan is wired directly to the Compressor, not through the controller	The Condenser Fan turns off when the Compressor is not running	The Condenser Fan is wired directly to the Compressor, not through the controller
EVAPORATOR FAN	The Evaporator Fan runs continuously. When the unit is plugged in, the Evaporator Fan will run.	The Evaporator Fan is connected directly to incoming power, not through the controller.	The Evaporator Fan runs continuously. When the unit is plugged in, The Evaporator Fan will run.	The Evaporator Fan is connected directly to incoming power, not through the controller.

Condition	Compressor	Condenser Fan	Evaporator Fan
Cabinet Temp > Set point + 2	ON	ON	ON
Cabinet Temperature <= Set point - 2	OFF	OFF	ON
Defrost	OFF	OFF	ON

CLEANING AND MAINTENANCE

Cleaning Schedule:

Cabinet	Condenser coil	Gaskets	Routine maintenance
Daily wipe down Weekly interior	Quarterly cleaning	Daily inspection, check that hinges are tight to the cabinet.	Annually

Daily Exterior Cleaning

It is much easier to clean on a regular basis than to have to remove stains once they have built up.

1. Wash with a clean sponge and a mild detergent that does not contain chlorine.
2. Rinse with clean water.
3. Dry with a soft cloth.
4. Polish with a soft cloth, wiping with the grain.
5. Wipe weekly with stainless steel cleaner.

Weekly Interior Cleaning

1. Remove all food, food related items and shelves. Store the food at a safe temperature.
2. Disconnect power to the unit (unplug it or switch the breaker off).
3. Remove all loose food particles from the inside walls, floor, door liner and ceiling.
4. Scrub all interior surfaces and door gaskets with a warm (100°F to 110°F) detergent solution and a soft scrub brush.
5. Rinse with clean water and allow to air dry.
6. Return the shelves to the unit and secure them.
7. Restore power.
8. Return food to the unit when it has reached a safe temperature.

Condensate Drainage and Cleaning

For BB models the condensate drains into a pan located just below the condensing compartment grille.

Faucet Cleaning

The faucet should be cleaned weekly. Disassemble with the provided spanner wrench clean with hot water and detergent. It is recommended to follow the dispenser system cleaning guidelines found in the Draught Quality Manual which can be found at, https://www.brewersassociation.org/educational-publications/draught-beer-quality-manual/

CONDENSER CLEANING

The condenser coil is located right behind the front grille on top of the cabinet. It should be inspected once a month and cleaned as required.

1. Remove power from the unit.

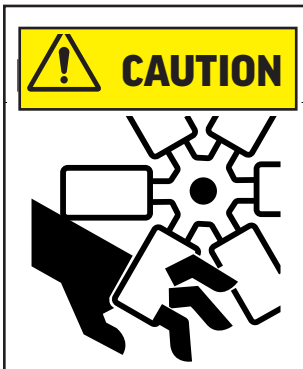

Rotating fan blade can cause personal injury.

Unplug unit from power supply before beginning to clean condenser

2. Vacuum clean all surfaces of the condenser.
3. Some coils will have an extreme layer of dirt, dust and grease covering the exterior. This should be removed with a wire brush, industrial vacuum or low pressure clean water before attempting to was with coil cleaner.
4. Make sure no fins are bent or damaged in the process. If there are bent fins, carefully straighten them so that air can flow through the coils. Failure to keep the condenser coil clean will lead to poor performance, excessive power consumption and compressor failure and may result in loss of property. Failure to keep the condenser coil clean may void the limited warranty.

Chemical Cleaning

1. Remove power from the unit.
2. A chemical condenser cleaning can be extremely messy so it is good practice to take the unit to a low traffic area or outside to do the cleaning whenever possible.
3. Remove cover grille.
4. Slide out condensing assembly if necessary.
5. Using the directions on the coil cleaning container, mix the cleaner and water into your sprayer.
6. Starting at the top with the tip about 6 inches away, begin spraying down the coil.
7. Spray side to side then go down to the next section of the coil. Repeat this until the coil is saturated.
8. Allow cleaner to soak into the dirty coil for a few minutes and then begin to rinse the coil.
9. Clean with a SMALL amount of water pressure. Too much pressure could cause the protective fins to fold over further blocking air flow through the coil.
10. Repeat this process as needed.
11. Let the unit dry off for a few minutes and replace the grille cover.

METHODS FOR CLEANING STAINLESS STEEL

Cleaning Needed	Cleaning Agent	Method of Application	Affect on Finish
Smears and fingerprints	Areal 20, Lac-O-Nu, Lumin Wash O'Cedar Cream Polish, Stainless Shine.	Rub with cloth as directed on the package.	Satisfactory for use on all finishes. Provides barrier film to minimize prints.
Stubborn Spots and Stains, Baked-On Splatter, and Other Light Discolorations	Allchem Concentrated Cleaner.	Apply with damp sponge or cloth. Rub with damp cloth.	Use in direction of polish lines on No. 4 (polished) finish. May scratch No. 2 (mill) and Nos. 7 and 8 (polished) finishes.
	Samae, Twinkle or Cameo Copper Cleaner	Rub with damp cloth.	
	Grade FFF Italian pumice, whiting, or talc.	Rub with dry cloth.	
	Liquid NuSteel Paste NuSteel or DuBois Temp. Copper's Stainless Steel Cleaner Revere Stainless Cleaner Household cleansers, such as Old Dutch, Lighthouse, Sunbrite, Wyandotte, Bab-O, Gold Dust, Sapolio, Bon Ami, Ajax, or Comet Grade F Italian Pumice, Steel Bright, Lumin Cleaner, Zud, Restore, Sta-Clean, or Highlite. Penny-Brite or Copper-Brite.	Use small amount of cleaner. Rub with dry cloth using a small amount of cleaner. Apply with damp sponge or cloth. Rub with a damp cloth. May contain chlorine bleaches. Rinse thoroughly after use. Rub with a damp cloth. Rub with a dry cloth using a small amount of cleaner.	
Heat tint or discoloration	Penny-Brite or Copper-Brite. Past NuSteel, DuBois Temp, or Tarnite. Revere Stainless Steel Cleaner. Allen Polish, Steel Bright, Tenacious Deposits, Rusty Discolorations, Industrial Atmospheric Stains Wyandotte, Bab-O or Zud.	Rub with a dry cloth. Rub with a dry cloth or stainless steel wool. Apply with damp sponge or cloth. Rub with a damp cloth.	
Burnt-On Foods and Grease Fatty Acids, Milkstone (where swabbing or rubbing is not practical)	Easy-Off, De-Grease-It, 4 to 6% hot solution of such agents as trisodium phosphate or sodium tripolyphosphate or 5 to 15% caustic soda solution	Apply generous coating. Allow to stand for 10-15 minutes. Rinse. Repeated application may be necessary.	Excellent removal, satisfactory for use on all finishes.
Tenacious Deposits, Rusty Discolorations, Industrial Atmospheric Stains	Oakite No. 33, Dilac Texo 12, Texo NY, Flash-Klenz, Caddy Cleaner, Turco Scale 4368 or Permag 57.	Swab and soak with clean cloth. Let stand 15 minutes or more according to directions on package, then rinse and dry.	Satisfactory for use on all finishes
Hard Water Spots and Scale	Vinegar. 5% oxalic acid, 5% sulfamic acid, 5 to 10% phosphoric acid, or Dilac, Oakite No. 33, Texo 12, Texo N.Y.	Swab or wipe with cloth. Rinse with water and dry. Swab or soak with cloth. Let stand 10-15 minutes. Always follow with neutralizer rinse, and dry.	Satisfactory for all finishes. Satisfactory for all finishes. Effective on tenacious deposits or where scale has built up.

HELP

Trouble Diagnosis for the User		
Malfunction	Possible Cause	Likely Solution
No cooling - unit is silent	Unit not plugged in. Fuse or circuit breaker tripped. Power cord plug loose in outlet.	Connect to proper voltage circuit Replace fuse or reset breaker. Check outlet for loose connection, replace as needed
Unit cools but seems to be on all the time	Dirty condenser	Clean condenser
Space temperature too high	Dirty condenser Evaporator iced over Unit in high temperature environment	Clean condenser Defrost evaporator Reduce temperature of room
Space temperature too low	Temperature control	Adjust or replace control
Trouble Diagnosis for the Technician		
No cooling - compressor does not hum	Temp control stuck in open position	Replace temp control.
No cooling - compressor hums but does not start	Low voltage to unit. Compressor starting system failure	Check voltage, correct as needed. Check start relay and start capacitor. See next step.
No cooling - compressor starts but shuts off	Compressor start relay failure Compressor start capacitor failure	Replace relay. Replace capacitor.
No cooling - compressor cycles on and off	Overheating weak overload	Clean condenser, check fan motor and blade. Check refrigerant charge. Replace overload.
Unit cools, but is slow to pull cabinet temperature down	Evaporator fan not turning	Check fan(s), on multiple fan units one fan may be turning slowly and will need to be replaced.
Unit cools but turns on and off frequently	No product in cabinet. Temperature control defective Refrigeration issue	Fill cabinet Replace control Have system checked
Makes excessive noise	Tubing rattle Loose parts Bent or broken fan blade Noisy fan motor	Check tubing for routing Check for loose components Replace fan blade Replace fan motor

FOR THE SERVICE TECH - R290

Refrigeration service should only be attempted by a trained trade professional certified to work on R290 systems.

Here are some critical service items.

This list does not qualify anyone to service the unit. It is a reminder and checklist for the service tech. Keep these in mind for **R290 service**:

- Wire nuts are NOT to be used when changing an electrical part.
- The switches in this product are sealed, **only exact replacements** may be used.
- The process tubes are to be used for service access.
- Cut out (with tubing cutter) refrigeration components that are to be replaced. Do NOT un-braze.
- Because R290 can be vented into the air during service, the venting MUST be in an area free from flame or spark. It must be near an opend window or door.
- A sign noting service of a system containing propane must be attached to the unit during refrigeration service.
- A combustible gas leak detector must be used to inform anyone in the area when propane is present in the air.

Other Information:

Evacuation: It is critical that a refrigeration system be leak free and internally dry. A thorough evacuation with a good vacuum pump with a micron gauge attached is the only way to ensure that the system is dry and ready for a charge of refrigerant.

Charging: The system is critically charged and the proper type and amount MUST be weighed in.

Overcharge symptoms: Unit will cool properly but the suction line temperature will be unusually cold. Compressor run time will be longer than normal.

Undercharge symptoms: Long run time, poor cooling and a hot compressor dome are the main symptoms of an undercharge.

FOR THE SERVICE TECH - WIRING DIAGRAM - DANFOSS CONTROLLER (EXCLUDING THE BB24HC MODELS)

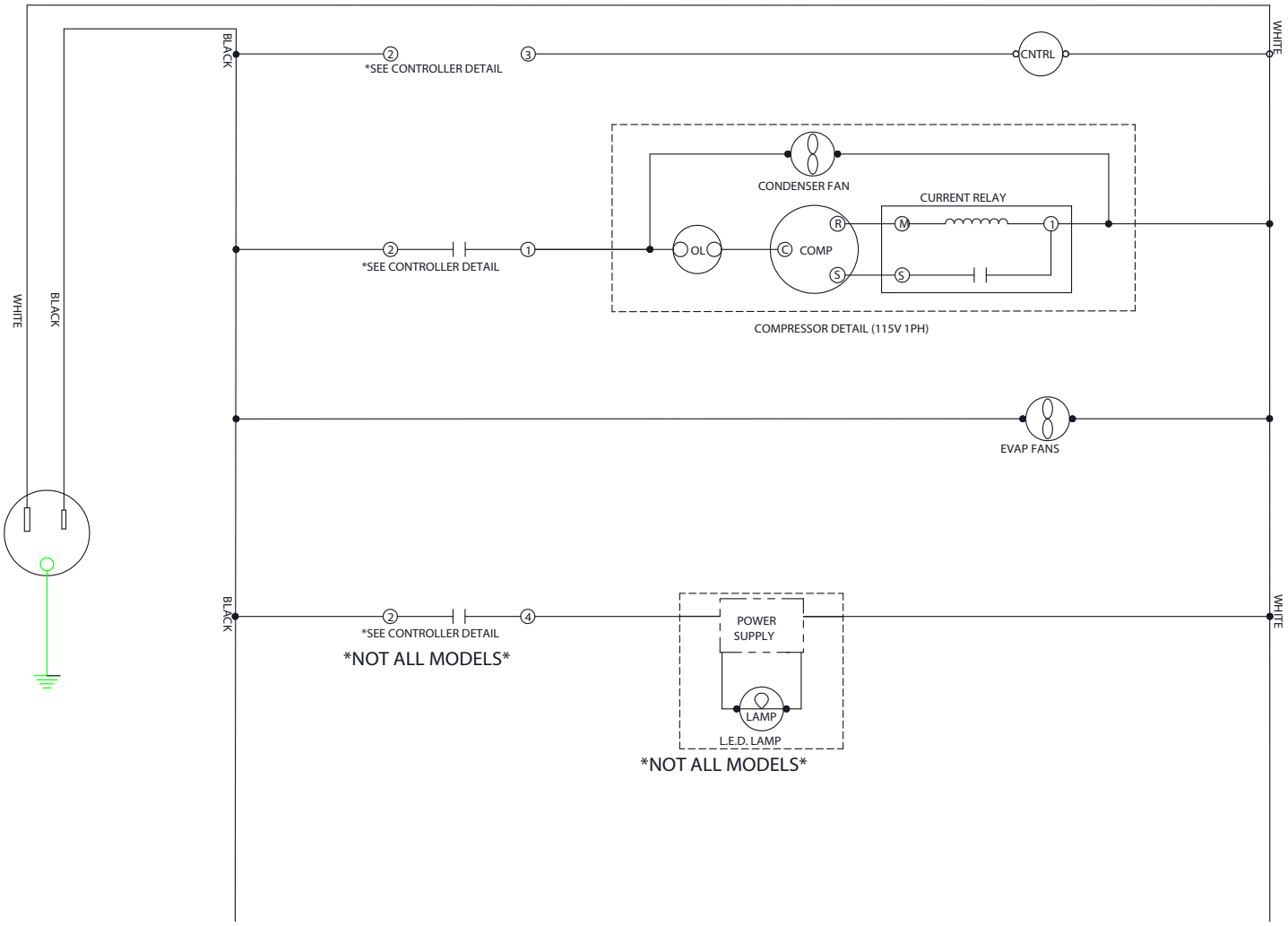

FOR THE SERVICE TECH - WIRING DIAGRAM - ELIWELL CONTROLLER (EXCLUDING THE BB24HC MODELS)

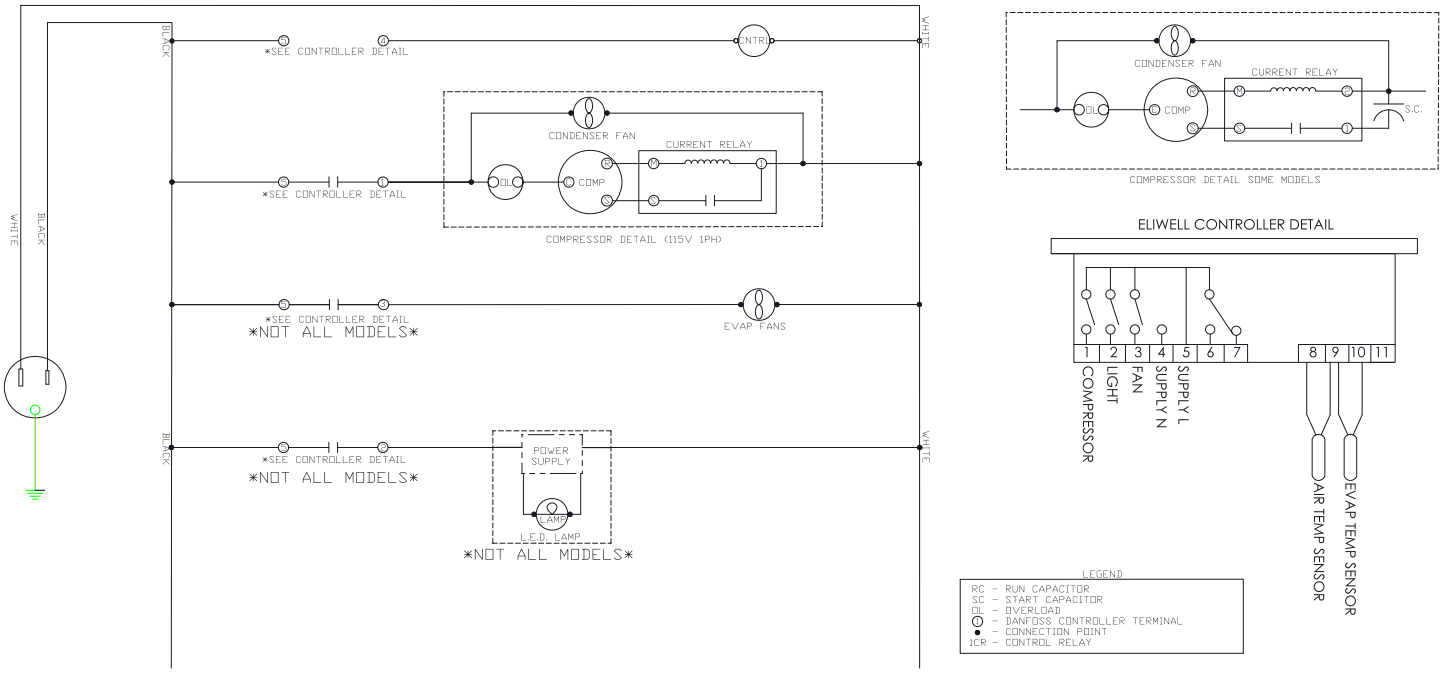

FOR THE SERVICE TECH - WIRING DIAGRAM FOR THE BB24HC MODELS

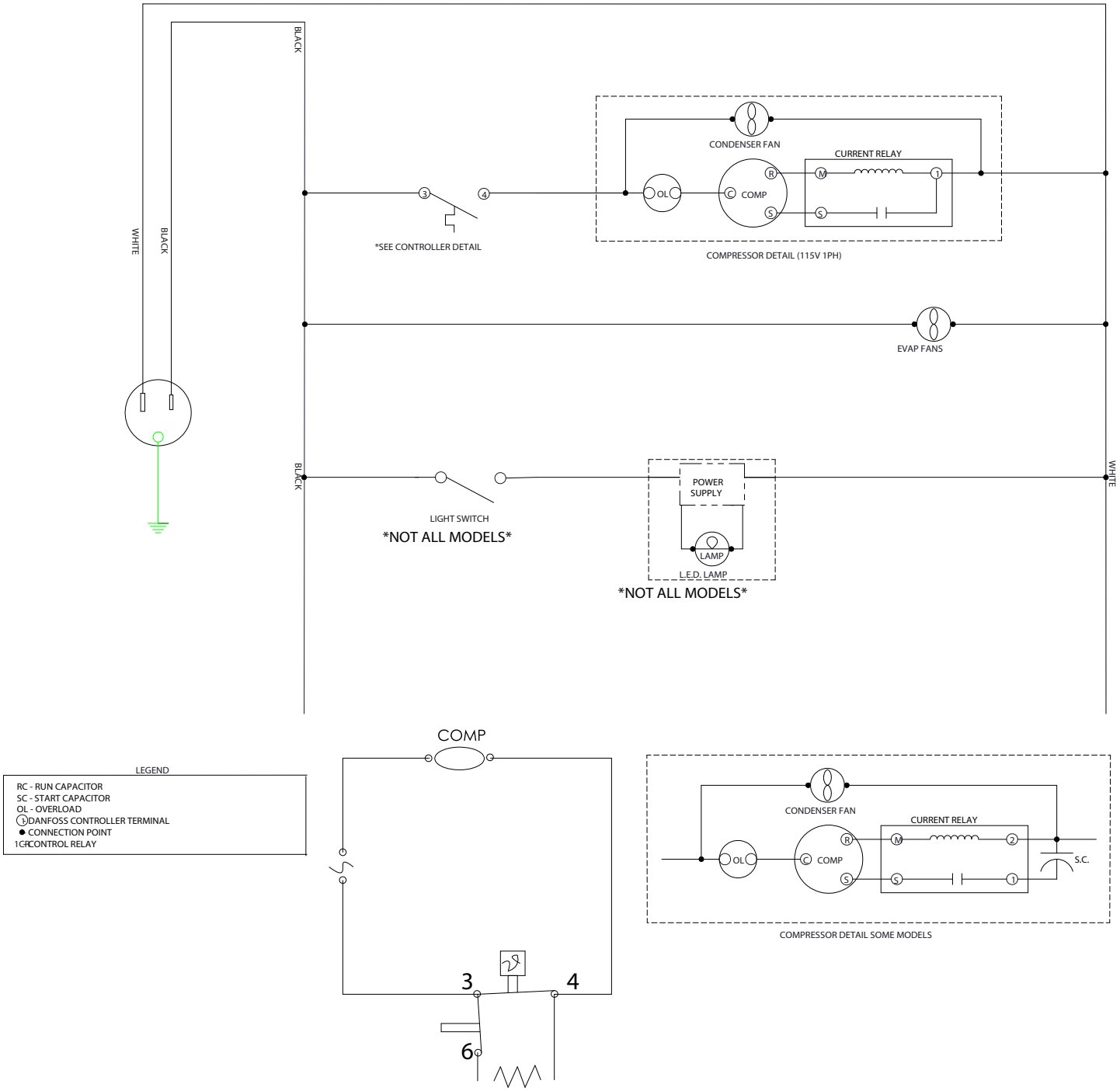

LIMITED WARRANTY

THREE (3) YEAR PARTS AND LABOR WARRANTY:

Beverage-Air Corporation warrants to the original purchaser of Beverage-Air branded equipment, including all parts thereof, that such equipment is free from defects in material and workmanship, under normal use, proper maintenance, and service as indicated by Beverage-Air installation and operation instructions, for a period of three (3) years from the date of installation, or thirty-nine (39) Months from the date of shipment from the manufacturer, whichever is earlier.

ADDITIONAL FOUR (4) YEAR COMPRESSOR PART WARRANTY*:

In addition to the warranty set forth above, Beverage-Air warrants the hermetically/semi-hermetically sealed compressor (part only) for an additional FOUR (4) years beyond the first three (3) years warranty period; not to exceed eighty-seven (87) months from the date of shipment from Beverage-Air, provided upon receipt of the compressor, manufacturer examination shows the sealed compressor to be defective. This extended warranty does not cover freight for the replacement compressor or freight for the return of the failed compressor.

* Units shipped after 03/01/2020. Previous warranty applies to units shipped prior.

EXCEPTIONS:

* CT96 Models carry a one (1) year parts and labor warranty, limited to fifteen (15) months from date of shipment from Beverage-Air. These are excluded from additional compressor warranty.

* SR/SF (Slate) models carry a two (2) year parts and labor warranty, limited to twenty-seven (27) months from date of shipment from Beverage-Air.

* TMR/TMF models carry a two (2) year parts and labor warranty, limited to twenty-seven (27) months from date of shipment from Beverage-Air.

* Blast Chillers carry a three (3) year parts and labor warranty; additional two (2) years compressor part only.

* Units installed in Residential applications will be not covered under this warranty. Units are intended for Commercial use only.

Also, this extended compressor-part only warranty does NOT apply to any electrical controls, condenser, evaporator, fan motors, overload switch, starting relay, capacitors, temperature control, filter/drier, accumulator, refrigeration tubing, wiring harness, labor charges, or supplies which are covered by the warranty above.

Normal wear type parts, such as light bulbs/lamps and gaskets are not covered by this warranty. For the purpose of this warranty, the original purchaser shall be deemed to mean the individual or company for who the product was originally installed.

Units that utilize variable speed compressor technology can experience nuisance tripping on Class A GFCI outlets which have a trip limit of 4mA to 6 mA. To avoid this issue in a location that requires GFCI circuit protection, Beverage-Air recommends a HUBBELL model number GFRST83W 20A heavy-duty hospital grade self-test GFCI receptacle.

Our obligation under this warranty shall be limited to repairing or replacing, including labor, any part of such product, which proves thus defective. Beverage-Air reserves the right to examine any product claimed to be defective.

The labor warranty shall be for self-contained units only and for standard straight time, which is defined as normal service rate time, for service performed during normal working hours. Any service requested outside of a servicer's normal working hours will be covered under this warranty at the normal rate and any additional overtime rate will be at the responsibility of the equipment purchaser.

Any part or accessory determined to be defective in the product should be returned to the company within thirty (30) days under the terms of this warranty and must be accompanied by a record of the cabinet model, serial number, and identified with a return material authorization number (RMA#) issued by the manufacturer.

Special installation/applications, including remote locations, are limited in coverage by this warranty. Any installation that requires extra work, and/or travel, to gain access to the unit for service is the sole responsibility of the equipment purchaser.

LIMITED WARRANTY (CONTINUED)

Improper operation resulting from factors, including but not limited to, improper or negligent cleaning and maintenance, low voltage conditions, inadequate wiring, outdoor use (unless otherwise specified) and accidental damage are no manufacturing defects and are strictly the responsibility of the purchaser.

With the exception of Blast Chillers, product is designed for maintaining temperature and not bringing food to a desired temperature therefore cannot be held responsible for this function under warranty.

Units must be in a conditioned environment or warranty will be void.

Condensing coils must be cleaned at regular intervals. Failure to do so can cause compressor malfunction and will void warranty. Although cleaning requirements vary in accordance with operation of various products, Beverage-Air recommends a minimum monthly cleaning.

NO CLAIMS CAN BE MADE AGAINST THIS WARRANTY FOR SPOILAGE OF FOOD, PRODUCTS, LOSS OF SALES OR CONSEQUENTIAL DAMAGES.

THE FOREGOING WARRANTIES ARE EXPRESSLY GIVEN IN LIEU OF ALL OTHER WARRANTIES, EXPRESS, IMPLIED, OR STATUTORY, INCLUDING THE IMPLIED WARRANTIES OF MERCHANTABILITY AND FITNESS FOR A PARTICULAR PURPOSE, WHICH ARE HERBY DISCLAIMED, ALL OTHER OBLIGATIONS OR LIABILITIES ON OUR PART, AND WE NEITHER ASSUME, NOR AUTHORIZE ANY OTHER PERSON TO ASSUME FOR US, ANY OBLIGATION OR LIABILITY IN CONNECTION WITH THE SALE OF SAID REFRIGERATION UNITS OR ANY PARTS THERE OF.

This warranty shall not be assignable and shall be honored only in so far as the original purchaser. This warranty does not apply outside the limits of the United States of America and Canada, nor does it apply to any part that has been subject to misuse, neglect alteration, accident, or to any damage caused by transportation, flood, fire, acts of terrorism, or acts of God.

LIMITATION OF LIABILITY:

Beverage-Air Corporation or their affiliates shall not be liable for any indirect, incidental, special or consequential damages, or losses of a commercial nature arising out of malfunction equipment or its parts components thereof, as a result of defects in material or workmanship.

THE ORIGINAL OWNER'S SOLE AND EXCLUSIVE REMEDY AND BEVERAGE-AIR'S SOLE AND EXCLUSIVE LIABILITY SHALL BE LIMITED TO THE REPAIR OR REPLACEMENT OF PARTS OR COMPONENTS CONTAINED IN THE EQUIPMENT IDENTIFIED ABOVE WHICH UNDER NORMAL USE AND SERVICE MALFUNCTION AS A RESULT OF DEFECTS IN MATERIAL OR WORKMANSHIP, SUBJECT TO THE APPLICABLE PROVISIONS AND LIMITATIONS STATED ABOVE.

Warranty Registration

Register your product online at **beverage-air.com/parts-service** or fill out and mail the form below.

Cabinet Model Number: _____ Date Of Installation: _____

Cabinet Serial Number: _____

Location Of Product

Business Name: _____

Business Street: _____

Business City: _____ State: _____ Postal Code:_____

Mail to: Beverage-Air, 3779 Champion Blvd, Winston-Salem, NC 27105

Rev. 06/23